KĀDANT
AN ACCENT ON INNOVATION

5750SBAF

High Speed Syphon System

Applications

The 5750SBAF self-supporting joint and cantilever stationary syphon is designed for high speed open gear paper machines. Operating differential pressure of 2 psig (0.14 bar) and blow-through rates as low as 5% provide increased flexibility and potential steam savings.

Features

- *Compact and lightweight design*
- *Integral insulating sleeve protects bearings from high temperature*
- *Balanced seal minimizes seal loading and seal wear*
- *Designed and built for limited dry running without damage*
- *Patented safety mechanism prevents damage to flex hose*

Benefits

- *Low torque operation and maximum syphon stability*
- *Easy installation*
- *Minimal seal load provides long life*
- *High speed operation*

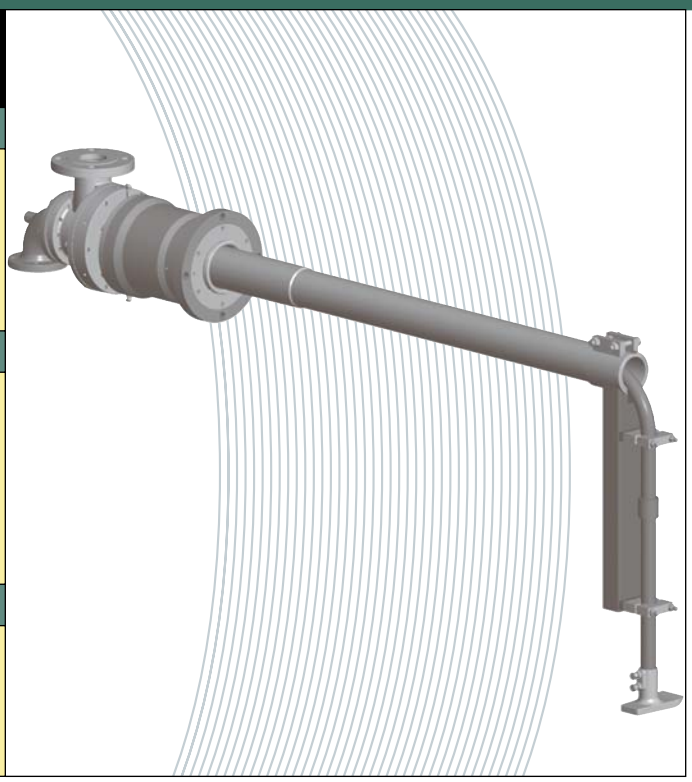

What makes the 5750SBAF self-supporting joint and cantilever stationary syphon different?
The 5750SBAF is able to operate at machine speeds up to 4000 fpm (1220 mpm) due to its unique rotating body design. The dryer journal supports the rotary joint which in turn provides a stable mounting for the cantilever syphon. The cantilever weight is carried by two widely spaced tapered roller bearings

The balanced seal keeps seal loading to a minimum to reduce friction and operating torque. The self-lubricating carbon seal can handle intermittent dry running, without damage to the seal. Field tests have proven the Kadant Johnson balanced seal outperforms conventional seals by more than three times.

How can the cantilever stationary syphon improve machine runnability?
The design of the cantilever stationary syphon allows for maximum reliability while reducing energy consumption. This system requires as low as 2 psig (0.14 bar) differential pressure and 5% blow-through steam. Dryer flooding is not possible when operating the 5750SBAF system above 2,000 fpm (600 mpm).

Since blow through steam flows are greatly reduced, less high-pressure (motive) steam flow is required by the thermocompressors to recompress the steam. The risk of steam venting is also greatly reduced because the thermocompressors can easily recompress all of the resulting blow through steam.

The reduced blow through flow rates also improves the effectiveness of the steam separator stations. This reduces condensate “carry-over”, improves thermocompressor performance, reduces erosion of thermocompressor components, and improves dryer effectiveness. The 5750SBAF joint and syphon system operates with low differentials and blow-through rates to maximize dryer effectiveness.

How does the 5750SBAF system reduce cost-per-ton?
The balanced seal and integral insulating sleeve provides years of trouble-free service resulting in less downtime due to joint maintenance. This results in direct savings by reducing maintenance time and costs.

Reductions in motive steam consumption and venting to condensers combined with improved performance from the separator stations can provide steam savings from 10% to 40% depending on the operating conditions of the machine.

The rugged design of the joint and syphon system reduces the possibility of equipment failure and valved-out dryers. Increased up-time and system flexibility add up to significant savings and lower cost-per-ton.

5750SBAF

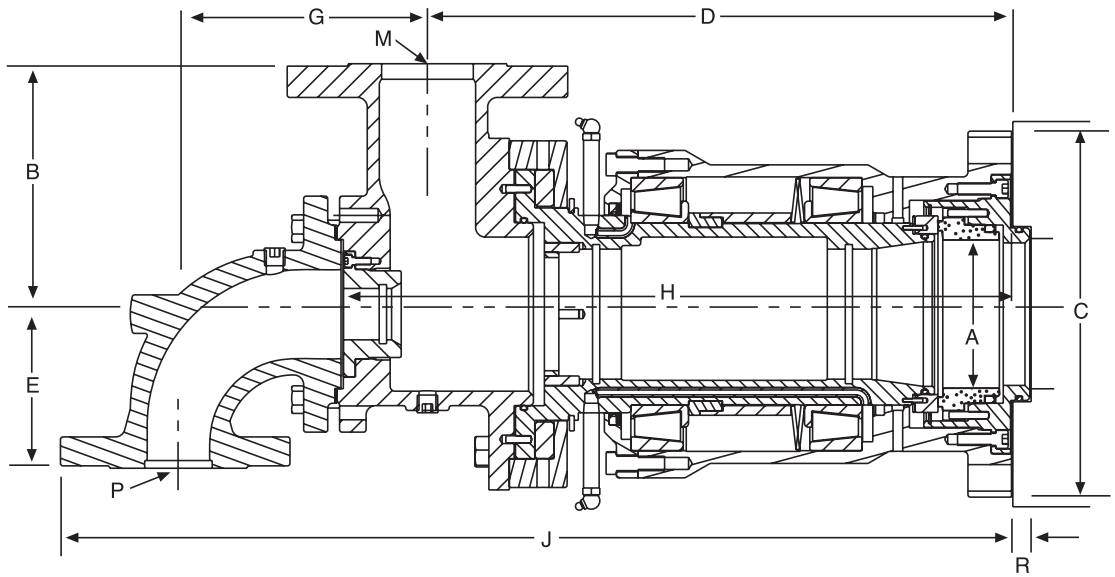

SBAF is rated up to 150 psig

Model	Size	M	P	A	B	C	D	E	G	H	J	R	Units
5750	3.5"	2.5"	1.5"	3.38	6.44	9.50	15.13	3.94	6.50	17.31	24.69	0.50	Inches
				86	164	241	384	100	165	440	627	13	mm

Wide range of applications

With its rigid, stable stationary syphon design, the cantilever syphon consistently operates at low differential pressures with no speed limitations. That makes it particularly suited to applications ranging from low speeds to the highest machine speeds in the paper industry.

Optimum syphon sizing: Kadant Johnson's exclusive approach

For peak operating effectiveness, the dryer drainage system must be properly sized and matched with the syphon size and type. Selecting and sizing the syphon and system components require critical review of operating conditions (e.g. differential pressure, operating pressure, speed, and condensing rates) for the entire range of grades produced. Changes in paper grades and dryer operating conditions can alter the dryer performance and operating efficiency.

Using Kadant Johnson's proprietary software programs, coupled with decades of experience, we can evaluate the performance and efficiency of alternative syphon systems, and design a system to meet the requirements of even the most demanding applications.

OPERATING DIFFERENTIAL PRESSURE

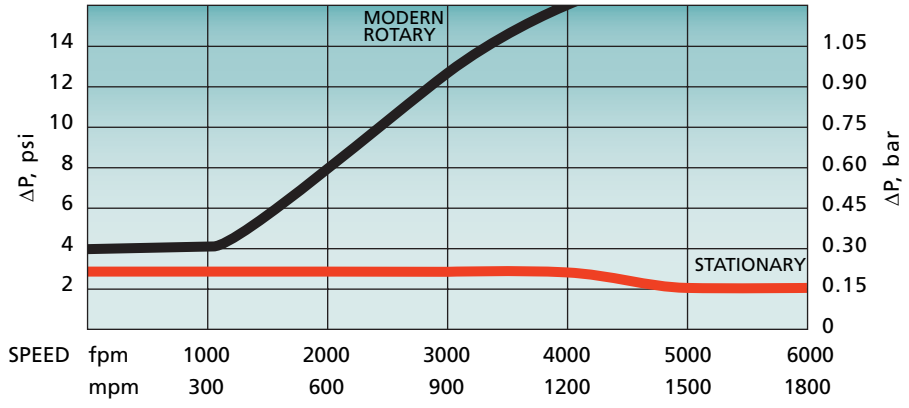

KADANT
AN ACCENT ON INNOVATION

Kadant is a leading global supplier of products and services that improve productivity and quality in paper production and other process industries. For the nearest location and contact, visit our Website.

www.kadant.com

Contact us:

KADANT JOHNSON
805 Wood Street
Three Rivers, MI 49093 USA

Tel: +1-269-278-1715
Fax: +1-269-279-5980
Email: info@kadant.com

5750SBAF-1000 07/2007
replaces 5750SBAF Flyer

© 2007 Kadant Inc.